25 mm (1") Pump Maximum Flow Rate: 140 lpm (37 gpm)

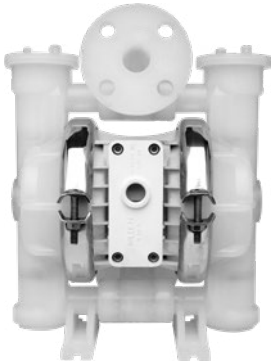

P2 PLASTIC

DIMENSIONAL DRAWING

P2 Plastic

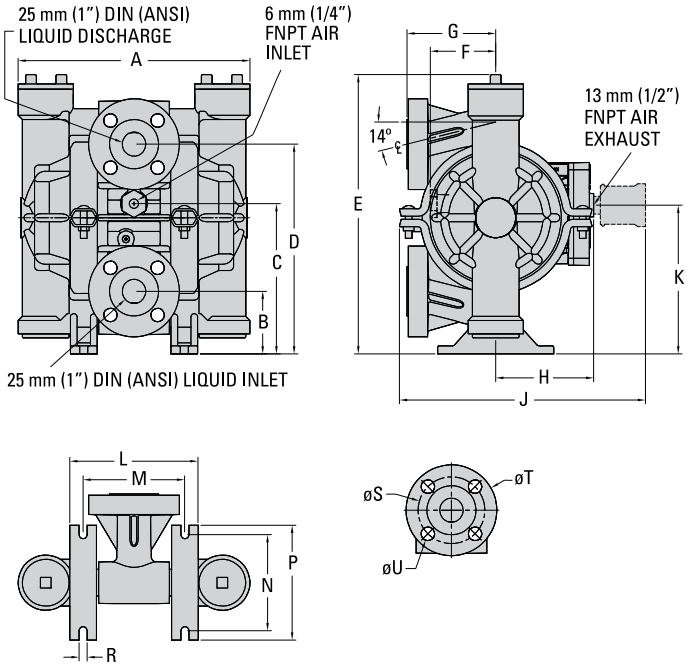

DIMENSIONS

ITEM	METRIC (mm)	STANDARD (inch)
A	277	10.9
B	76	3.0
C	180	7.1
D	249	9.8
E	333	13.1
F	81	3.2
G	107	4.2
H	124	4.9
J	292	11.5
K	180	7.1
L	152	6.0
M	122	4.8
N	114	4.5
P	137	5.4
R	10	0.4
DIN		
S	84 DIA.	3.3 DIA.
T	114 DIA.	4.5 DIA.
U	15 DIA.	0.6 DIA.
ANSI		
S	79 DIA.	3.1 DIA.
T	109 DIA.	4.3 DIA.
U	15 DIA.	0.6 DIA.

PUMP DATA

Specifications:

Ship Weight.....Polypropylene 8 kg (18 lb)
PVDF 10 kg (23 lb)

Air Inlet.....6 mm (1/4")

Liquid Inlet..... 25 mm (1")

Liquid Outlet..... 25 mm (1")

WILDEN®

22069 Van Buren Street
Grand Terrace, CA 92313-5607 USA

O: +1 (909) 422-1730 F: +1 (909) 783-3440
www.wildenpump.com

PSG® a DOVER company
psgdover.com

PERFORMANCE

P2 PLASTIC RUBBER-FITTED

Max. Flow Rate..... 140 lpm (37 gpm)
Max. Inlet Pressure ..... 8.6 bar (125 psig)
Max. Size Solids.....3.2 mm (1/8")
Max. Suction Lift..... 5.5 m Dry (18.0')
8.8 m Wet (29.0')

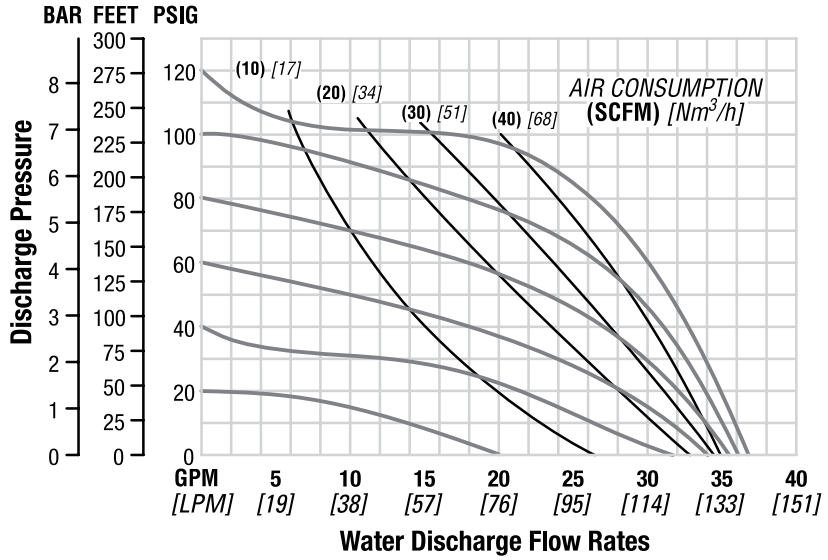

Click button to view Performance Curve → RUBBER-FITTED | TPE-FITTED

P2 PLASTIC REDUCED-STROKE PTFE-FITTED

Max. Flow Rate..... 132 lpm (35 gpm)
Max. Inlet Pressure ..... 8.6 bar (125 psig)
Max. Size Solids.....3.2 mm (1/8")
Max. Suction Lift..... 3.4 m Dry (11.0')
8.8 m Wet (29.0')

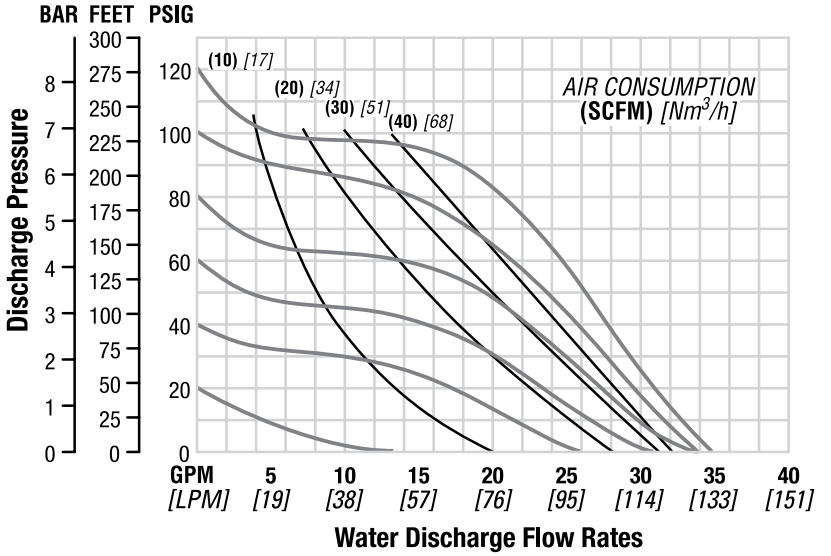

Click button to view Performance Curve → REDUCED-STROKE PTFE-FITTED | FULL-STROKE PTFE-FITTED

WILDEN®
22069 Van Buren Street
Grand Terrace, CA 92313-5607 USA
O: +1 (909) 422-1730 F: +1 (909) 783-3440
www.wildenpump.com